9502-DCDA Block Diagram

Downconverter/DA

with 3G/HD/SD-SDI Input, HD/SD-SDI Processed Outputs, and SDI Input Reclocking

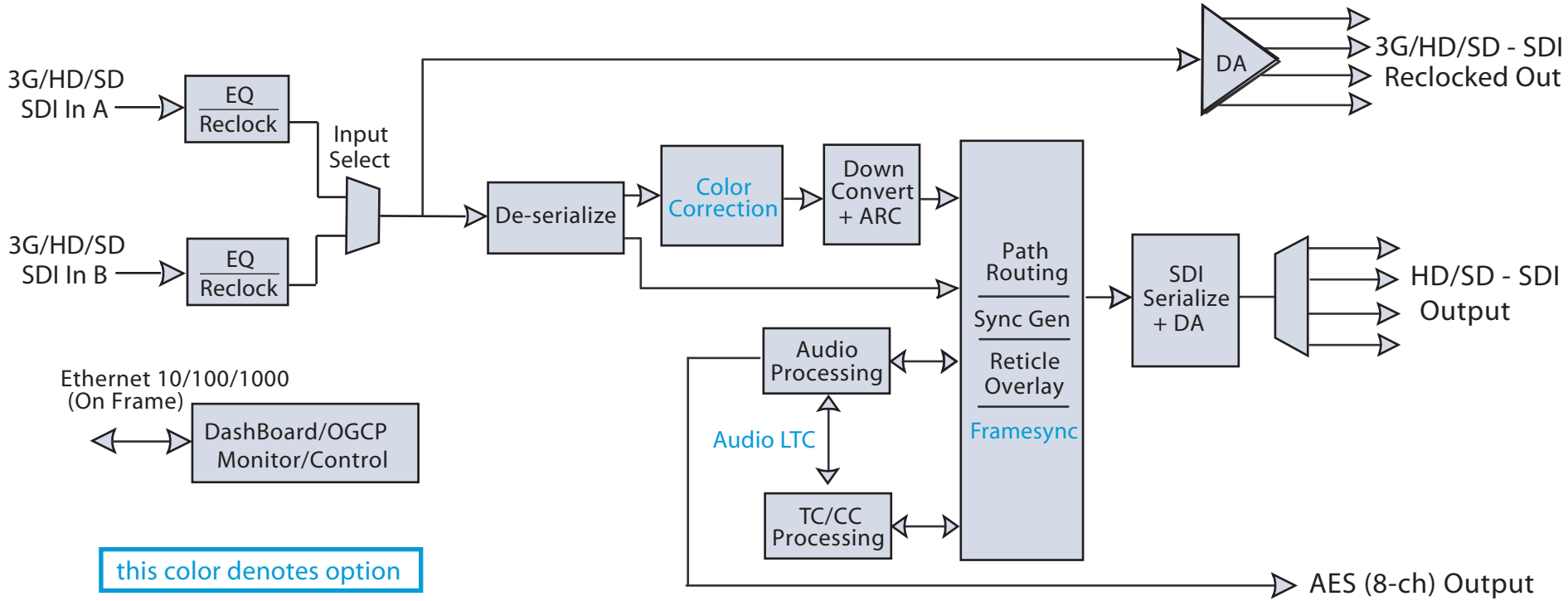

COBALT

Cobalt Digital Inc.
2506 Galen Drive
Champaign IL, 61821

217.344.1243
info@cobaltdigital.com
www.cobaltdigital.com