COBALT SAPPHIRE BBG-2110-4H/S

Quad channel converter from IP to HDMI and 12G SDI

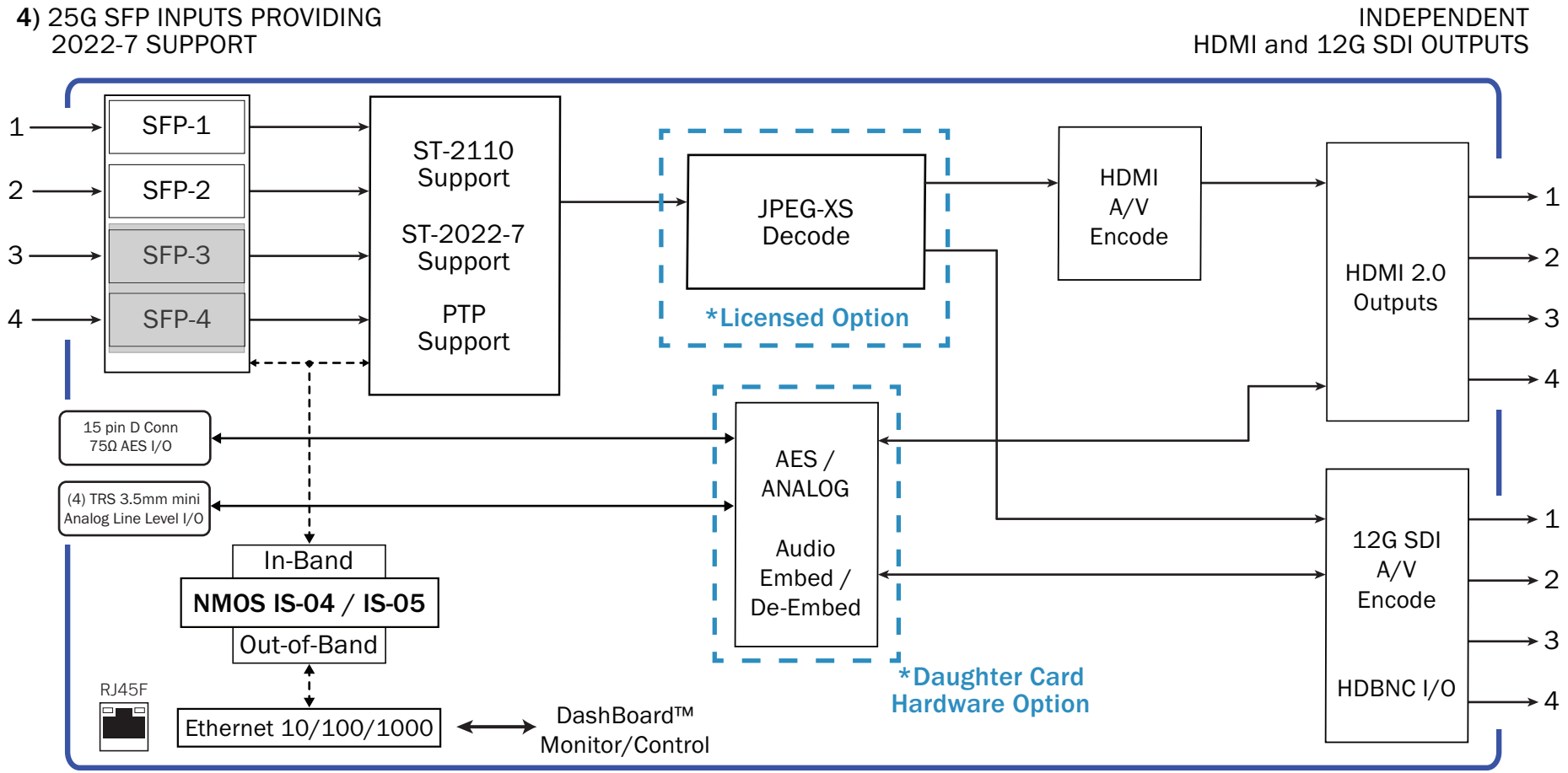

Note: Quad simultaneous path processing is available offering the same features & functions. SAPPHIRE BBG units are capable of fully asynchronous operation and are IPMX-compliant.

This color denotes option

COBALT

Cobalt Digital Inc.
2506 Galen Drive
Champaign IL, 61821

(217) 344-1243
info@cobaltdigital.com
www.cobaltdigital.com